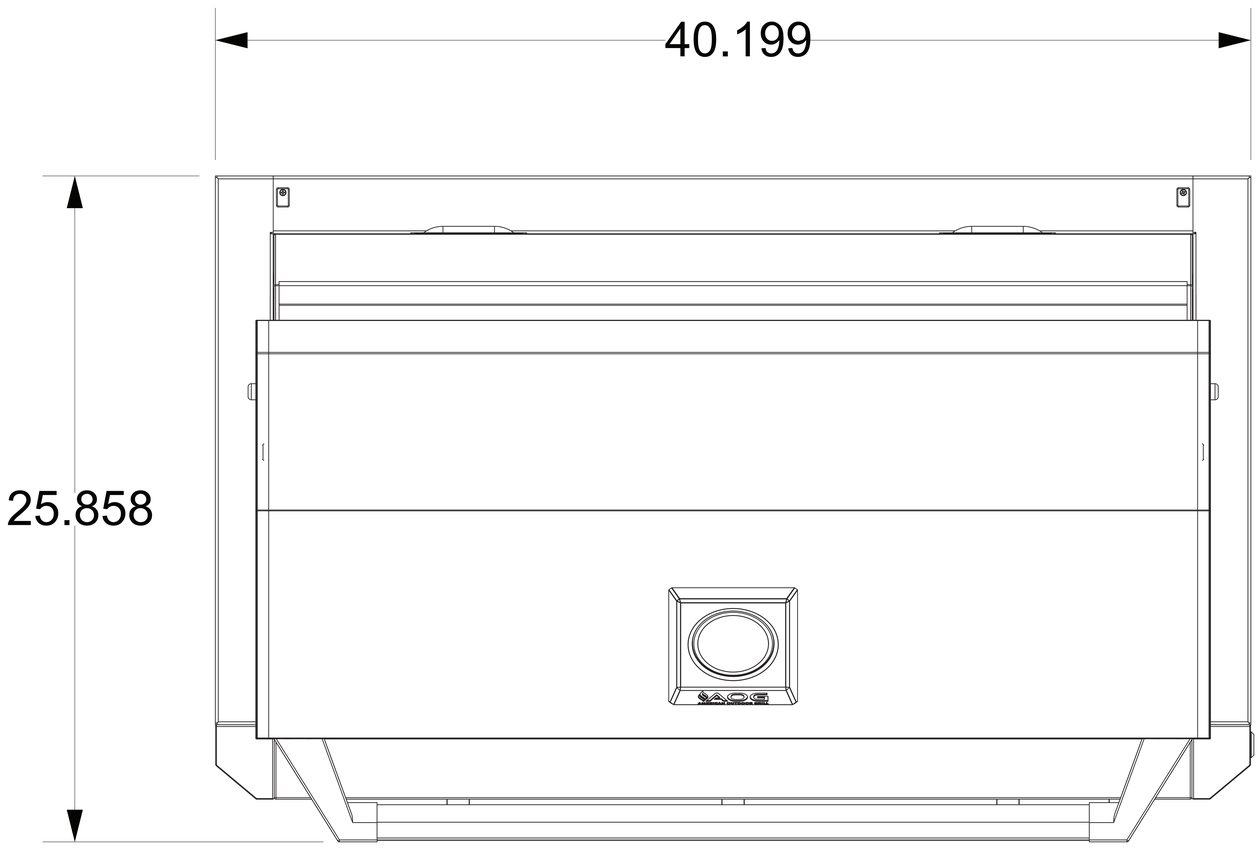

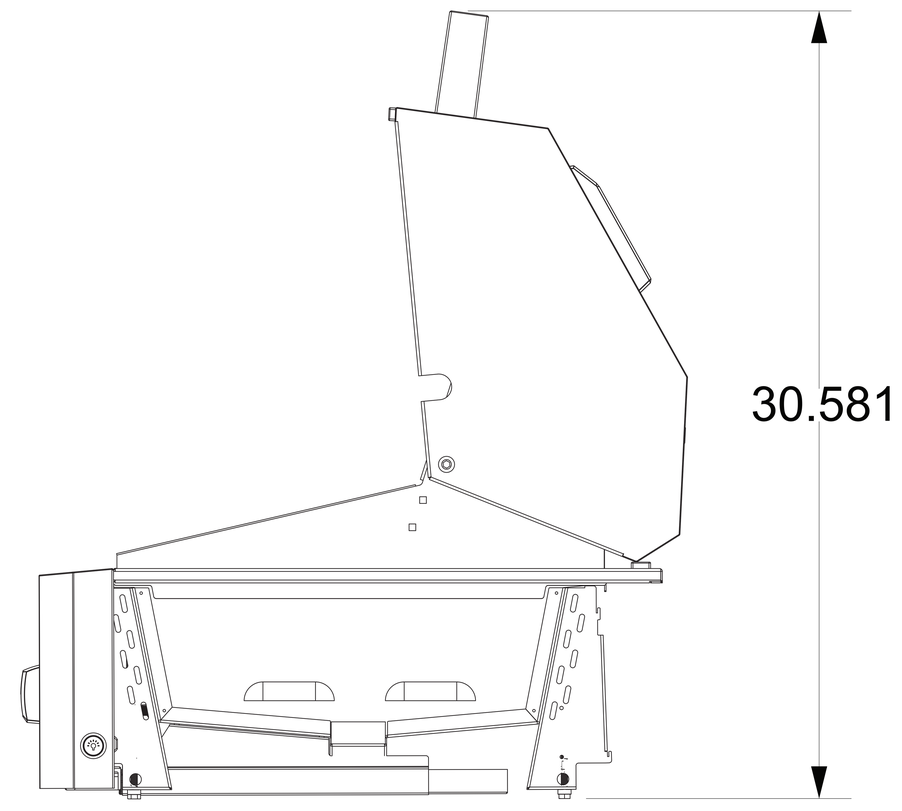

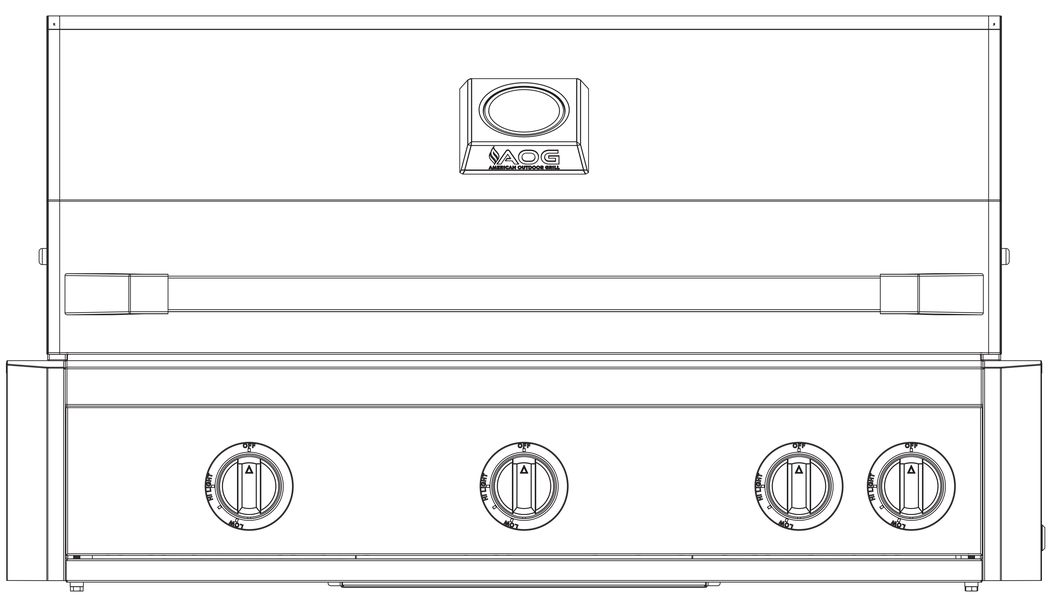

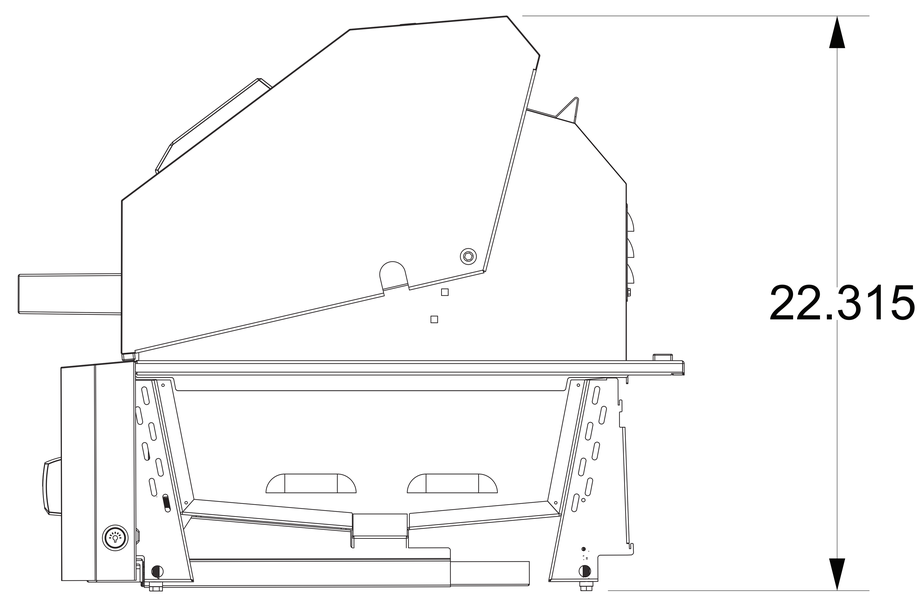

AOG
AMERICAN OUTDOOR GRILL

AOG36LN(P)
36″ L-Series Built-In Grill