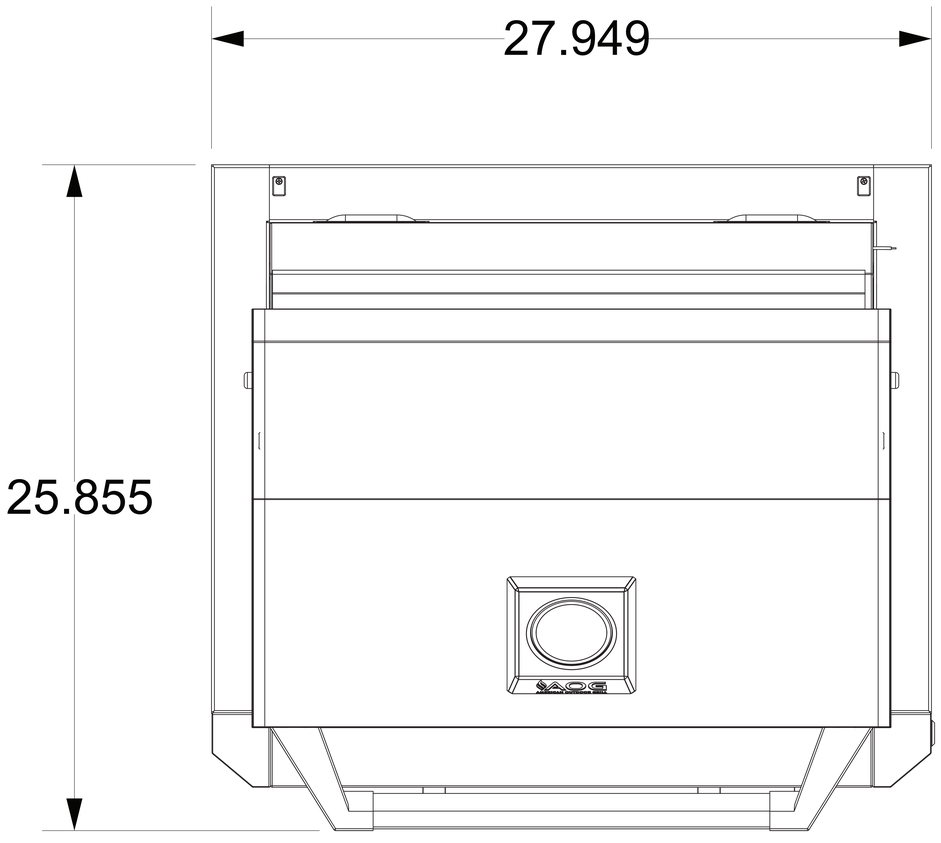

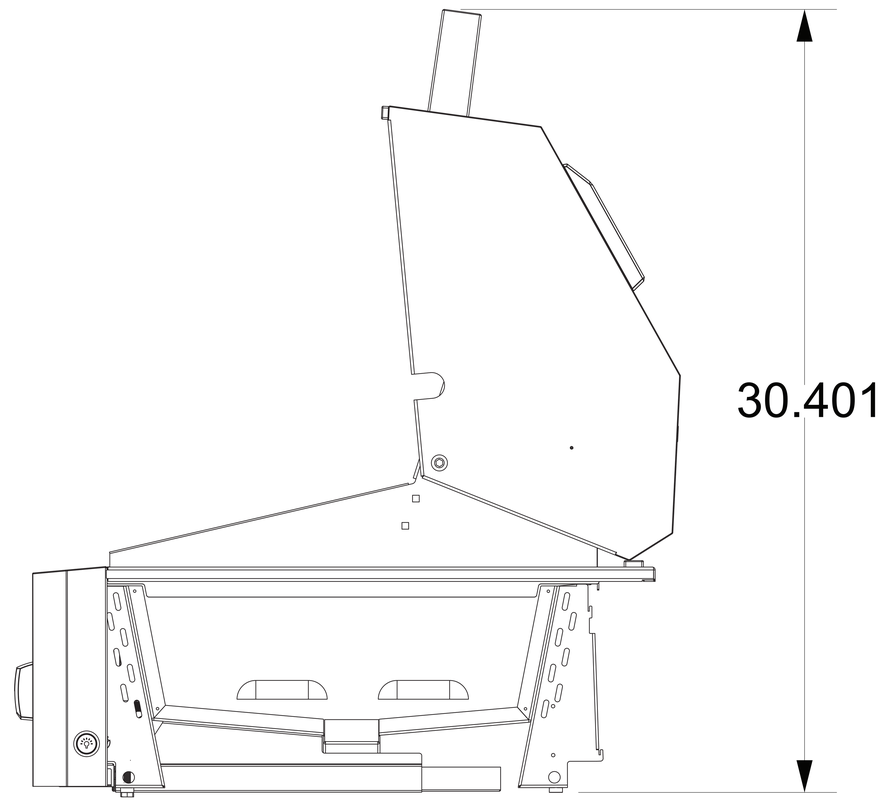

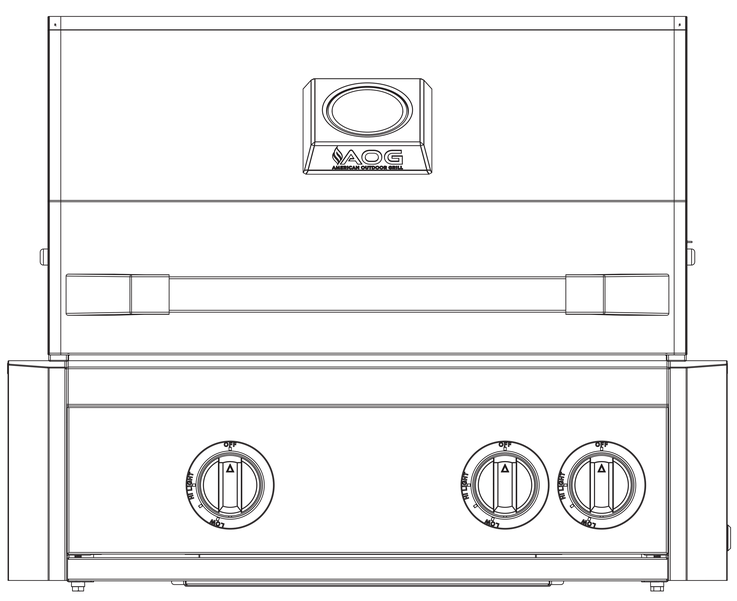

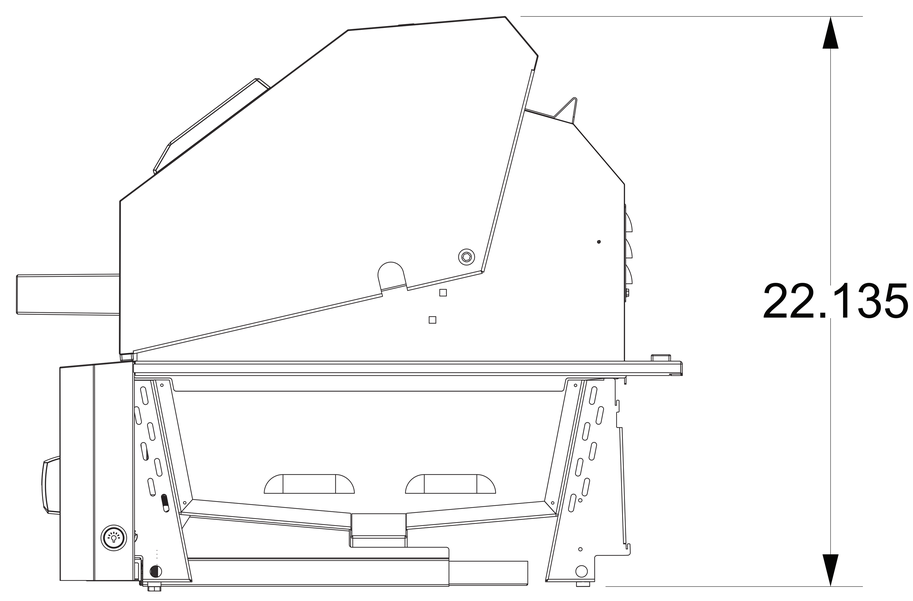

AOG
AMERICAN OUTDOOR GRILL

AOG24LN(P)
24″ L-Series Built-In Grill